PANEL PART #1018105A

SCALE:
NTS

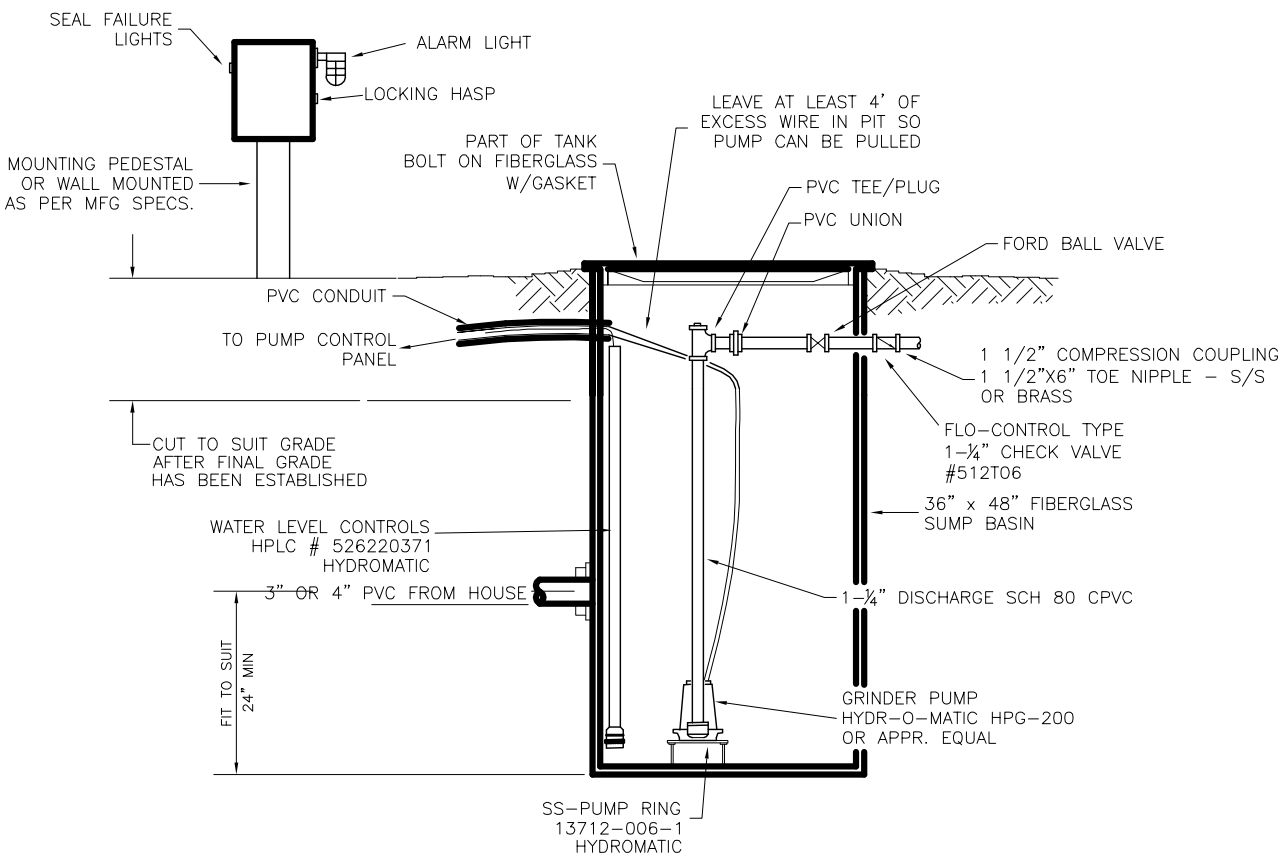

SECTION A-A

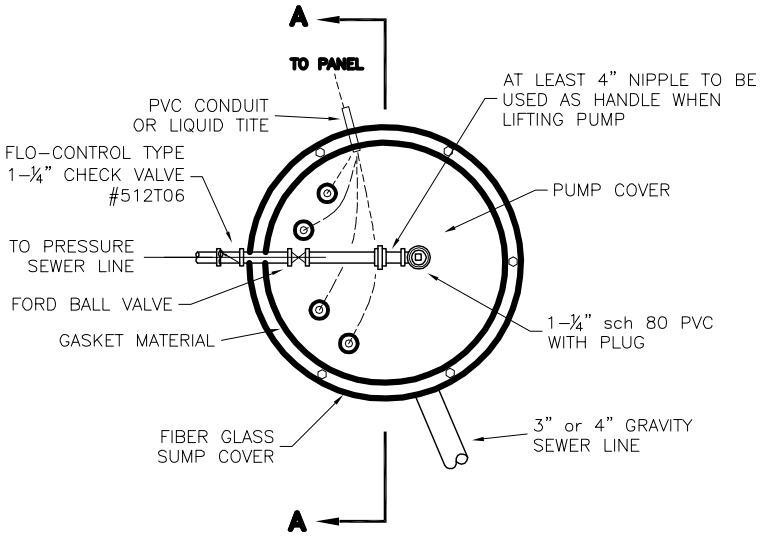

PLAN

City of Horseshoe Bay

SIMPLEX GRINDER PUMP DETAIL

Willis Environmental Engineering, Inc.

CONSULTING ENGINEERS

310 MAIN STREET, MARBLE FALLS, TEXAS 78654

• (830) 693-3566 • FAX (830) 693-5362 • e-mail: tplumlee@willis-engineering.com